CONSTRUCTION
Training Group

LEARNER GUIDE

Street Sweeper Safety

SS

For the prescribed occupation of street sweeper Operator which is not included in the scope of National Guidelines for Occupational Health & Safety Competency Standards for the operation of load shifting equipment and other types of specified equipment [NOHSC: 7019(1992)]

PO Box 2026
Mountain Gate VIC 3156
p: 03 9763 5449

ABN: 37 106 951 900
RTO: 21396

ASSESSOR GUIDELINES – GENERAL

1. Introduction

1.1 Scope

These general guidelines for assessment are based on that prescribed by the National Guidelines for Occupational Health & Safety Competency Standards for the Operation of Loadshifting Equipment and Other Types of Specific Equipment [NOHSC:7019]

Assessors should also be familiar with the publication Assessment guidelings for National Occupational Health & Safety Certification Standard for users and operators of industrial equipment [NOHSC: 1006]

1.2 Additional Guidelines

Guidelines which provide additional specific information to certificate assessors are also included in each assessment instrument. Included, where appropriate, are specific instruction on the usefulness of training records (such as logbooks) and other certificates with overlapping competencies.

1.3 Evidence of Competence

Evidence of competence is established in a number of ways. The methods used in the following instruments involve:

- Assessment of practical performance
- Written and/or oral answers to questions on underpinning knowledge.

2. Preparing for the Assessment

2.1 Study the instruments

You need to read the assessment instruments and specific instructions carefully before beginning an assessment.

2.2 Confirm Appointments

Prior to an assessment, you need to confirm the date, time and location of the assessment with the applicant and any other relevant people.

2.3 Equipment Availability

The availability of equipment, materials and a suitable working area must be organised and confirmed, prior to the assessment.

2.4 Workplace Factors

Because procedures and processes vary greatly between workplaces, it is important for assessors to plan their approaches to meet the requirements of the individual workplace.
Make sure you take the timeframe into account when planning the assessment and also make the applicant aware of any time limits.

2.5 Selecting Questions

Questions for the written/oral assessment should be randomly
selected, either by hand or using the computer system, if applicable.

3. Conducting the Assessment

3.1 Provide an Explanation

Begin by explaining clearly to the applicant what is required of them. Check that the applicant has provided (or has been provided with) the necessary tools and equipment.

3.2 Practical Performance

Complete the practical performance checklist, as the applicant works through the required tasks. Wherever possible, this should be done in a normal working environment.
Do not ask the applicant questions while he/she is performing a task, as this can be distracting, and may affect the time taken to complete the assessment.

If, at any time, the applicant is endangering themself or others, stop the assessment immediately. This indicates that the applicant is not yet competent and may require further training, before being reassessed.

Assessments should also be stopped, if equipment or property is likely to be damaged.

3.3 Knowledge

The knowledge assessment covers both oral and written exercises. The model answers provided with the knowledge assessment instruments are not necessarily exhaustive. Use your own judgement when scoring alternative answers.

3.4 Recording Responses

A box accompanies each item and question on the assessment forms you use. Assessors must complete every box as follows:

✓	CORRECT PERFORMANCE/ ANSWER
X	NOT YET ACHIEVED
NA	NOT APPLICABLE

If a box is marked incorrectly, cross out the mistake, mark the correct response alongside, and initial the change.

4. Determining Competencies

4.1 Assessment Summary

A specific assessment summary is given for each certificate class. This is to be filled in and signed by the assessor and counter signed by the applicant.

4.2 Competency Requirements

In order for you to deem an applicant competent, he or she must have completed each section of the assessment to the standard required. You should note any time constraints when arriving at your decision.

The standard required for each instrument is specified in the specific guidelines and/or on the summary page at the end of each instrument.

4.3 Additional Comments

Where an applicant fails to meet the standard of competence, you should add a written comment on the Assessment Summary, which briefly explains the problem. Advice to the applicant, on the appropriate remedial action should also be included. This will also assist the certificate assessor, in the event that the applicant undergoes future reassessment. Likewise, if an applicant demonstrates outstanding or remarkable performance, this should be noted.

4.4 Further Investigation

As a certificate assessor, it is your role to determine whether or not an applicant has achieved the standard necessary for the certifying Authority to be able to grant a certificate of competency.
Whenever you are unsure of the applicant's performance or knowledge, ask additional questions, and obtain additional evidence, before making your final decision.

Electricity Supply Cables

High Voltage Contact will result in electrical current flowing through the equipment to ground. The ground will then be energised with a high voltage near the equipment and lower voltage further away.

In the event that the equipment does contact live electricity supply cables, the equipment operator should observe the following precautions.

a) Remain inside cab or at operator's station.

b) Warn all other personnel to keep away from equipment and not to touch any part of the equipment, rope or load.

c) Try, unaided, and without anyone approaching the equipment, to move the equipment until it is clear of electricity supply cable.

d) If the equipment cannot be moved away, remain inside the cab or at operator's station. If possible get someone to inform the electricity supply authority at once. Take no action until it has been confirmed that conditions are safe.

e) If it is essential to leave the cab or operator's station because of fire or some other reason, jump clear as far away from the equipment as possible. Do not touch the equipment and the ground at the same time.

When moving away from the equipment, the equipment operator should shuffle or hop slowly across the affected area. Large steps should be avoided as one foot could be in a high voltage area and the other in a low voltage area. Under some circumstances, the difference between the two could kill.

* Below is an example of the boom of an item of equipment contacting overhead electricity supply cables.

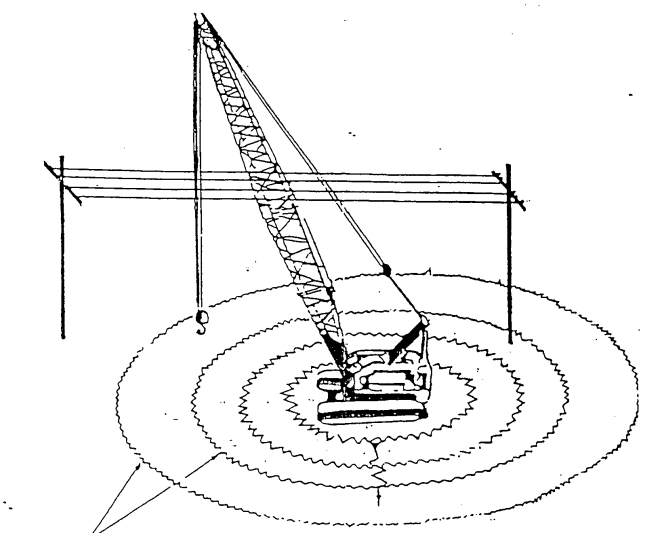

Areas of different voltage

CONSTRUCTION
Training Group

National Guidelines for OHS Competency Standards

Street Sweeper Safety

PART ONE

PERFORMANCE ASSESSMENT

CONSTRUCTION Training Group

Assessor Guidelines – Specific (Performance Assessment)

ASSESSMENT INSTRUMENT – SPECIATIONS

The performance assessment covers the following Loadshift elements:

1.1, 1.2, 1.3, 2.1, 3.1 & 3.2

1. The assessment requires the operator to check the equipment, plan the work and to safely and competently operate, the Water Cart. The assessment is performed in six sections:

1.1 Conduct routine pre-operational check of Water Cart/equipment and the security of attachments.

1.2 Inspect the site, plan work and select and fit appropriate attachments.

1.3 Conduct pre-operational and post start up checks.

1.4 Drive Water Cart to the work area.

1.5 Operate Water Cart

1.6 Shut down the equipment and secure the site.

2. Prior learning and experience

2.1 An applicant who holds a Tip Truck &/or Dump Truck certificate does not require assessment in sections 2, 3 and 4.

3. The performance assessment can be conducted at any location which has:
Sufficient clear space to operate the water cart
Ground suitable for adding water

4. Equipment and Resources Required:
- A Water Cart and equipment.
- Suitable site on which to use the Water Cart.

5. Unless other arrangements are agreed to by the assessor, it will be the responsibility of the applicant, applicant's employer or trainer to provide the required equipment and resources.

6. To be assessed an applicant must wear:
- Safety helmet (where required) Appropriate footwear
- Other protective clothing and equipment as appropriate.
- Long hair tied back/in bun/under hat

7. The performance of each applicant is to be recorded on the assessor's checklist.

8. Safety of personnel:
When an applicant is working dangerously, recklessly or without the necessary co-ordination, the assessor must direct the applicant to cease work and terminate those parts of the assessment immediately.

9. The applicant must undertake all performance criteria. An assessor must use his/her discretion in assessing competence under each criteria.
The elements under each criteria must be marked with the appropriate tick, cross or n/a to indicate an applicant's competence level for that element.

Assessors Note: All performance criteria marked with a grey box are compulsory/critical. To determine a person's competence under each performance criteria, a prescribed number of elements are required to be demonstrated/answered under those criteria. The applicant must achieve the minimum specified number or more, of the performance elements to achieve competence for those criteria.

To record the applicant's competence for the criteria a tick must be placed in the box.

10. Where a performance element cannot be performed the assessor can simulate or ask a question. The response must be recorded.

11. Where an applicant is assessed as not yet competent he/she must be informed of the reason(s) in order to gain further appropriate training.

12. The full performance assessment can take up to 1 hour.

13. The general assessment requirements are set out in Assessors Guidelines - General.

14. Competence is achieved for a unit when the required number of shaded boxs for that unit has been ticked.

Overall competence is achieved when competence in all units has been achieved.

Conduct Routine Checks:

1.1 Routine checks on vehicle/equipment:
Tyre condition and inflation, condition of wheels.
(Checks at least 10 including 2 shaded)
Checks liquid levels:

- ☐ Fuel
- ☐ Hydraulic oil
- ☐ Engine oil
- ☐ Coolant
- ☐ Transmission
- ☐ Battery

Checks equipment for defects:

- ☐ Damaged, worn or broken parts
- ■ Safety guards and covers
- ■ Warning signs
- ☐ Loose nuts, bolts
- ☐ Hoses and fittings
- ☐ Grease holes and grease pins
- ☐ Connections for missing pins or keepers

Plan Work and Check Equipment

Inspects site and plans work
(Checks at least 7 including 2 shaded)
Identify Hazards

- ☐ Rough/uneven/unstable terrain
- ☐ Obstructions
- ■ Inclines and declines
- ■ Soft and sloping edges
- ☐ Restricted operator vision area
- ☐ Filling site
- ☐ Power lines, phone lines
- ☐ Service drains

Access and path of movement is indicated

- ☐ To work area
- ☐ For work

Appropriate equipment for the task

- ☐ Equipment is appropriate for the task

Operational Checks

(Checks at least 12 including 8 shaded)
Conducts pre-operational and post start-up checks in accordance with manufacturer's specifications/operating manual.

- ☐ Mounts correctly
- ☐ Adjusts seat, secures safety belt
- ☐ In neutral, park brake on
- ■ Warning device
- ■ Turn signals
- ■ Stop/tail lights
- ■ Head lights
- ☐ Starts engine
- ☐ Gauges
- ☐ Warm up allowed
- ■ Clear for travel
- ■ Foot brake
- ☐ Parking brake
- ☐ Retarder brake
- ☐ Steering

2. Drives Unit:
(*Checks at least 18 including 9 shaded*)

2.1 Drives to the work area

- ■ Ensures travel direction clear
- ■ Selects appropriate route
- ■ Travels at safe speed
- ☐ Obeys road and warning signs

2.2 Fills, transports, discharges water

- ☐ Positions street sweeper in correct position for loading
- ☐ Checks tank is full
- ■ Checks that filling area is clear of other plant/vehicles before moving off

- ☐ Maintains safe distance from edges as directed by supervisor, site instructions, signing or barricades
- ■ Uses transmission, brakes correctly
- ☐ Travels on haul road/job site as directed by site instructions
- ■ Maintains safe following distance with other plant/vehicles
- ☐ Travels at safe and acceptable speed
- ■ Drives street sweeper to suit ground conditions, e.g. mud, boggy areas, inclines, rough ground, slippery ground, sand
- ☐ Avoids sudden steering or severe braking actions on sloping ground if driving an articulated street sweeper (if applicable) *Note: If not applicable the assessor is to verbally ask the applicant why these areas should be avoided*
- ■ Avoids travelling across sloping ground if possible when driving an articulated street sweeper (if applicable). *Note: If not applicable the assessor is to verbally ask the applicant why this area should be avoided*
- ☐ Checks discharge area is clear
- ☐ Obeys directions given by supervisor (if applicable)
- ■ Checks rear view mirrors
- ■ Before reversing, aware of personnel/other plant etc
- ☐ Aware of danger areas e.g. obstructions, edges, excavations, overheads
- ☐ Unloading over a bank uses wheel stops, safety barrier, body level
- ☐ Gives way to loaded plant and vehicles
- ☐ Signals are interpreted and observed

3. <u>Shuts down equipment and secures site:</u>

Shuts down equipment and secures site
(Checks at least 7 including 4 shaded)

Parks equipment –

- ■ Machine in correct area
- ☐ Machine parked in suitable area

Shuts down equipment –

- ☐ Neutralises controls
- ■ Sets parking brake
- ☐ As per Operation Manual

Post operational check –

- ☐ Checks for leaking valves
- ☐ Minor servicing
- ■ Checks and reports any damage

Avoiding hazards –

- ■ Parks away from danger areas
- ☐ Removes keys
- ☐ Locks cabin (if applicable)

CONSTRUCTION
Training Group

National Guidelines for OHS Competency Standards

Street Sweeper Safety

ORAL/WRITTEN ASSESSMENT

Assessor Guidelines – Specific (Knowledge Assessment)

ASSESSMENT INSTRUMENT – SPECIATIONS

The performance assessment covers the following Load shift elements:

1.1, 1.2, 1.3, 2.1, 3.1 & 3.2

1. Oral/written assessment for street sweeper is divided into three units.
2. To satisfy the requirements for competency the applicant must correctly answer (either in writing or orally) all critical questions as indicated by a shaded box and a minimum of 75% if the non-critical questions from each unit

Assessor Note: The assessment summary specifies the appropriate number of non-critical questions to be achieved.

Unit 1

1.0 – Conduct Routine Checks
Select 9 including 5 shaded

1.1 – Plan Work
Select 13 including 7 shaded

1.2 – Check controls and equipment
Select 3 including 2 shaded

Unit 2

Select 4 including 3 shaded

2.2 – Load, Transport & Discharge materials
Select 10 including 5 shaded

Unit 3

3.1 - Shut Down Equipment
Select 3 including 2 shaded

3.2 – Secure Site
Select 1

3. Prior learning experience: An applicant who holds a Tip Truck &/or a Haul Truck certificate who answers questions for performance criteria for 1.1 and 2.2 satisfactorily is not required to complete the rest of the assessment.
4. The full oral/written assessment of eighty questions can take up to 1 hour to complete
5. The items indicated by a shaded box are of critical importance. Failing to get any of these correct means that competency has not been achieved
6. Competence is achieved for a unit when the required number of boxes for that unit have been ticked or marked correct.

Overall competence is achieved when competence in all units has been assessed and achieved.

CONSTRUCTION Training Group

CONDUCT ROUTINE CHECKS:
(Select 9 from Q1-16 including 5 with a shaded box)

1. What precautions must be taken when an inspection or work has to be performed near a crush point? ■
Locate and put in place locking pin/safety bar

2. What should be the first check of your street sweeper at the shaded box of your shift? ■
Walk around it looking for visual defects

3. What should be provided on the street sweeper to prevent the operator from being dislodged from the seat of the street sweeper? ■
Safety belt.

4. What warning device should function on the street sweeper to warn personnel that the street sweeper is to travel or is travelling in reverse? ■
A reverse warning device.

5. If an air system were installed on the street sweeper what daily action would you take with condensation in the air receiver? ☐
Drain the water from the tank.

6. Name three defects that you would look for when conducting a routine check on the hydraulic system of the street sweeper if fitted. ☐
Hydraulic oil leaks, loose connections and hoses for splits, fractures or bulges.

7. What problem bubbles or milky engine oil in the sump could indicate? ☐
Water leaking into the sump.

8. Why shouldn't the hydraulic oil storage tank be filled above the full mark? ☐
Space in the tank is needed for displacement in the system.

9. When changing a battery which battery clamp should be removed first? ☐
The earthed battery clamp.

10. Name five pre-operational checks that should be carried out on the street sweeper before it is started. ☐

Radiator, battery, fuel, oil, hydraulic lines, tyres, attachments etc.

11. How should you remove the radiator filter cap of a street sweeper that has not completely cooled off? ■
Slowly loosen cap to release pressure and then slowly remove cap.

12. How should you establish that pre-start checks have been carried out? ☐
Check operator's log book/daily inspection checklist

13. Why shouldn't tyres be checked while they are still heat affected from the effect of travelling? ☐
Pressure in tyres would be increased by heat.

14. How would you establish the service and the frequency of the service to be carried out on the street sweeper you are required to operate? ☐
By the Service Manual provided by the manufacturer.

15. What fault in the street sweeper would excessive or uneven wear on tyres be an indication of? ☐
A bent axle or wheel alignment.

16. To establish if the required service has been conducted, what document would you refer to? ☐
The Log/Service Book.

1.1 Plan work

(Select 4 from 17-23 including 3 with a shaded box)

17. What hazards would you look for and avoid establishing the most appropriate route to travel? ■
Sloping, soft or rough terrain, obstructions such as trees, stumps or rocks and underground services.

18. What would you refer to in order to establish the location of underground services? □
Supply authority or council maps.

19. Before sweeping the job site, what action would you take with a rutted, rough or pitted sweeping route? □
Reduce speed, contact supervisor for other routes or levelling of ground

20. Why should side hill travel be avoided where possible? ■
The street sweeper may roll over.

21. What effect would a rough surface have on the operating speed of the street sweeper? □
It would decrease the safe operating speed and decrease productivity.

22. If you accidentally damaged an electrical cable who would you immediately contact to render the power supply safe? □
The electrical supply authority.

23. What is the danger of travelling near the edge of the fill, or embankment? List two ■
The fill may collapse; street sweeper may tip or roll over, injury to operator.

(Select 3 from Q24-29 including 1 with a shaded box)

24. What should be provided to prevent a person falling into a trench or excavation? □
Signs and barricades.

25. How should the flow of road traffic be controlled where signs and barricades are considered inadequate to control a potential hazard? □
By traffic controller or by police.

26. When should ear protection be worn? □
Where the noise could contribute to the loss of hearing.

27. If there is a likelihood of the street sweeper being overturned what must be provided on the street sweeper to protect the operator? ■
A Roll Over Protective Structure and safety belts.

28. When should a person wear a safety helmet? □
Where the person could be struck on the head.

29. What is the minimum type of footwear that an operator should wear to operate a street sweeper? □
Non-slip footwear, steel cap boot.

(Select 2 from 30-31 including 1 with a shaded box)

30. Which is the preferred route of travel, diagonally across or directly down a sloping surface? ■
Directly down the sloping surface.

31. What gear should be selected to travel down a steep sloping surface? □
Low gear, the gear required to climb the sloping surface.

(Select 1 from Q32-34)

32. In hazardous working areas where permission is required to work what must the operator ensure before the work is commenced?
That the required permits have been obtained.

33. What licence do you require to drive the following on a public road?
Relevant VicRoads Licence

(Select 3 from 35-39 including 2 with a shaded box

34. Is it permissible to carry passengers in a street sweeper?
Yes if an approved seat and seat belt is supplied.

35. How would you establish the capabilities and limitations of the equipment?
From the Manufacturer's Manual.

36. What is required to be obtained before an unregistered street sweeper is driven along a public road?
An unregistered vehicle permit

1.2 <u>Check controls and equipment</u>
(Select 3 from Q37-40 including 2 with a shaded box)

37. What actions would you take with damage and defects found on the street sweeper?
    - ***Stop work***
    - ***Tag machine 'Do Not Use'***
    - ***Report damage or defect to employers***
    - ***A competent person is to repair***

38. What controls would you test to ensure that the street sweeper could be slowed and stopped?
Foot break controls

39. On the post start up check you notice a bulge form in an air line. What action would you take?
    - **Stop Work**
    - **Tag Machine 'Do Not Use'**
    - **Report damage or defect to employers**
    - **A competent person is to repair**

40. When should the operator on the street sweeper that is to be operated make tests, checks and inspections?
Daily before and after use

<u>2. Drive Unit</u>
(Select 4 from Q41-44 including 3 with shade boxes)

41. (ORAL) Applicant to state the meaning of the hand signal of "stop" demonstrated by the examiner.
Stop.

42. How would you dismount a machine that contacted live power lines?
Jump clear, shuffle away and keep area clear.

43. When travelling what would you do before travelling down a steep grade?
Reduce speed and select appropriate gear for the grade. Use retarder if fitted.

44. Before reversing a street sweeper what precautions should be taken?
Ensure direction of travel is clear.

2.2 Load and Transport
(Select 11 from 48-60 including 5 with a shaded box)

45. What is the danger of slipping tyres on shale or rock?
Tyres may be cut.

46. Would you coast the street sweeper downhill?
No.

47. What effect does fanning the brake control instead of a firm application of the brake control have on the air pressure for the brakes?
Fanning may exhaust the pressure faster than the compressor can replace it

48. Why is it important to place the street sweeper directly in line with the waste pit while emptying the tub?
To minimise spillage, which causes boggy ground

49. Why must caution be shown when travelling on sloping ground with an articulated street sweeper.
Explain you answer.
Street sweeper may tip over. Articulated vehicles are not as stable as rigid vehicles on sloping ground. Centre of gravity.

50. Explain why empty street sweepers must give way to loaded plant and vehicles
Empty haul vehicle has better braking and manoeuvrability.

51. Why is it important to obey the Spotters directions?
Spotter has better ground vision

52. What aids can be used to guide the street sweeper operator when working near a bank?
List two.
Safety barriers, spotters, tapes, guide posts.

53. Why should sudden steering or severe braking actions be avoided on sloping ground when operating an articulated street sweeper?
The vehicle could tip or roll over.

54. If the brakes (including holding emergency brake) failed while travelling downgrade what action would you take to stop the street sweeper?
Take evasive action by running the vehicle into a drain batter or soft area if possible.

55. As an operator would you leave an unattended street sweeper engine running?
No.

3.1 Shut down equipment
(Select 3 from Q56-59 including 2 with a shaded box)

56. Name the areas where you would not park the street sweeper.
Access ways, rear overhangs, refuelling sites, tidal flood areas, adjacent excavations, on roads.

57. Which direction should the street sweeper face if it has to be parked on a sloping surface?
Across the slope.

58. Where possible what type of surface should be selected to park the street sweeper on?
A level or solid surface

59. What post-operational checks the operator on the street sweeper to prepare it ready to be reoperated should carry out?
Checks structure and equipment for defects and wear. Check fluid levels

3.2 <u>Secure Site</u>
(Select 1 from Q66-67)

60. For what reason should the key be removed from the ignition of the machine?
To prevent unauthorised movement.

61. What shall be provided when a street sweeper has to be parked on or protrudes onto an access way?
Barricades, lights and signs.

CONSTRUCTION Training Group

Unit	Form of assessment	Total number of boxes in the assessment	Number of boxes given or NA	Number of boxes required to meet standard	Were all critical boxes given or NA?		Assessment standard requirements achieved *		
1	Performance	12		17	Yes	No	Yes	No	
	Knowledge	14		11	Yes	No	Yes	No	
	Assessment completed within time allowed						Yes	No	NA
2	Performance	9		9	Yes	No	Yes	No	
	Knowledge	8		6	Yes	No	Yes	No	
	Assessment completed within time allowed						Yes	No	NA
3	Performance	4		3	Yes	No	Yes	No	
	Knowledge	2		2	Yes	No	Yes	No	
	Assessment completed within time allowed						Yes	No	NA

*Performance standard = Number of items required to meet standard (including all critical boxes)

Knowledge standard = Number of questions required to meet standard (including all critical boxes)

Summary

Candidate is:

☐ **COMPETENT** Date:_____

☐ **NOT YET COMPETENT**

Name of Assessor:_____ Signature: _____

Name of Candidate_____ Signature: _____

Comments/feedback:

_____

_____

_____

_____